CONTRACT: *Client Name – Street, Town, Postcode*

JPC Demolition LLP

3rd December 2013

Structural Demolition of *Street, Town, Postcode*

Safe Method of Work

JPCD000/000

Rev -

CONTRACT: *Client Name – Street, Town, Postcode*

Contents:

CONTRACT: *Client Name – Street, Town, Postcode*

1. Details:
   1.1 Method statement prepared by *Joe Bloggs* and checked by John Peck
   1.2 To be read in conjunction with separate Asbestos removal method statement
   1.3 The buried services drawing must be acknowledge by all those carrying out excavation works, this is available in the site managers office, a permit is required for this operation
   1.4 The programme must be adhered to at all times unless directly instructed by the supervisor

2. Description of operation:
   2.1 Description of work: Demolition of *Building Description*
   2.2 Duration: In line with the Master Programme
   2.3 Various plant will be used, refer to section 4 of this document
   2.4 Please refer to service avoidance plan located in the site office
   2.5 No work shall commence until relevant permits have been issued by *Main Contractor*
   2.6 Location: *Street, Town, Postcode*
   2.7 Materials: *N/A*

3. Sequence of operations:
   3.1 The area will be segregated and fenced off in accordance with the Site Set Up & Heras Fencing Method Statement.
   3.2 An inspection of the area with the supervisor, assistant supervisor and the operatives will be carried out and any risk identified will be dealt with and managed correctly, consultation with the *Main Contractor* build manager and seek advice from the safety team.
   3.3 To be read in conjunction with separate Asbestos removal method statement
   3.4 The buildings will be soft stripped and all recyclable materials retained for recycling, all other materials will be disposed of the appropriate manner in accordance with the separate Soft Strip Method Statement.
   3.5 Sectional demolition will follow the asbestos removal and soft strip, most demolition works will be carried out using excavators and water suppression systems at all times, wherever possible
   3.6 The existing foundations will be excavated, refer to the service avoidance plan
   3.7 The masonry arising will be crushed and stockpiled.
   3.8 The areas of work and are programmed in such a way as to separate the asbestos areas and demolition works at all times

4. Asbestos Removal
   4.1 Please see separate Asbestos Removal Method Statement.

5. Soft Strip
   5.1 Please see separate Soft Strip Method Statement.

6. Structural demolition:
   6.1 Site induction will be undertaken by *Main Contractor*
   6.2 Site Supervisor induction will be given to the JPC SSSTS by *Main Contractor*

6.3 Following the asbestos removal and soft strip the *description of buildings* will be taken down.
6.4 The works will be carried out by a *description of Plant* with appropriate demo cages, the excavators will work from the top down in accordance with the *Main Contractor* master programme
6.5 Using the excavators the masonry arising's will be broken up into manageable sizes and transported to the crush zone for crushing and stockpiling on site
6.6 The demolition areas will be controlled by a trained banks man
6.7 Throughout the demolition works, 'clearance breaks' will be taken at regular intervals to allow the resulting steel and debris to be segregated
6.8 All ground floor slabs and foundations will be scanned using cable avoidance tools and where required the signal generator prior to any excavations and demolitions work
6.9 A permit to dig will be issued by *Main Contractor* prior to ground breaking taking place.

7. Segregation of works:
   7.1 Each area of demolition will be heras fenced off with and entrance and exit point
   7.2 Each entry point will have a white board will a simple sign in and sign out for everyone entering that specific zone.

8. Asbestos Waste:
   8.1 To be read in conjunction with separate Asbestos removal method statement

9. Plant and equipment:
   4.1 All plant operatives will hold a current CPCS card
   4.2 All operatives will employ a bungee key fob at all times
   4.3 *JCB JS220*
   4.4 *JCB Telehandler*
   4.6 All plant will be thoroughly checked daily, checklists completed and check sheets given to the supervisor

10. Access and fall protection:
    10.1 Tower scaffolds will be used during the soft strip and will have guard rails and a harness will be used at all times; please see separate Soft Strip Method Statement.

11. Waste control and waste management:
    11.1 All waste is to segregated into the appropriate bins as marked
    11.2 Recycled materials will processed on site for transportation to the relevant recycling centres

12. Lift Plan:
    12.1 N/A

13. Training and supervision:
    13.1 Before any works start the site supervisor will check all operatives have had the relevant *Main Contractor* site induction.
    13.2 All supervisory operatives will hold a SSSTS certificate

13.3 All site personnel are required to keep their CSCS / CPCS CITB cards with them at all times
13.4 Number of operatives carrying out this task *1No. Supervisor & 4No. Operatives*

14. PPE
    14.1 Hard hat, safety boots / rigger boots, Cat2 gloves, Hi-visibility vests or jackets and safety goggles / specs to be worn at all times, ear defenders are required during noisy works

15. Manual handling:
    15.1 Low risk, see attached risk assessment
    15.2 All waste in excess of 20kg will be dealt with mechanically

16. Risk assessments & appendix:
    16.1 The following risk assessments are to read in conjunction with this method statement
    16.2 Manual handling
    16.3 Buried services
    16.4 Working at height
    16.5 Glass
    16.6 Reversing Lorries
    16.7 COSHH risk assessment ' Diesel'
    16.8 Environmental risks – A bunded drip tray for refuelling the excavators and plant including an emergency spill kit will be kept by the works area at all times
    16.9 Appendix 1 – Demolition & Associated Works Policy

17. Control measures:
    17.1 Fire extinguishers are located as indicated on the fire plan
    17.2 In the event of an emergency / accident the site supervisor will contact the emergency services and comply with *Main Contractor* emergency plan
    17.3 A permit to dig is required from *Main Contractor* prior to any excavations and in accordance with the service avoidance plan situated in the site managers office
    17.4 All Hot Works require a permit to be submitted to *Main Contractor* prior to the commencement of works.
    17.5 Hot works will have its own fire extinguisher at the place of works.
    17.6 In the event of an emergency JPC may be contacted on 01983 720920
    17.7 The JPC Site Supervisor can be reached 24h on ***** ******
    17.8 Medical Surveillance
        17.8.1 SSSTS to have full details of all operatives Medical Conditions.
        17.8.2 SSSTS to have full details of all operatives emergency contact details.
        17.8.3 No Site Operatives require Medical Surveillance.

18. Delivery & collection of Plant, Equipment & Materials to Site:
    18.1 The SSSTS Site Supervisor will be on site to sign for & monitor the unloading of all deliveries.
    18.2 Delivery & collection of all plant, equipment, materials etc. to be included in the approved SSoW.

18.3 No access permitted onto the bed of the delivery vehicle without prior approved fall arrest systems & edge protection in place.

19. Disconnection of Live Services to the Existing Building:
    19.1 Disconnection of the existing services is the responsibility of *Main Contractor*.
    19.2 *Main Contractor* are to provide written & photographic confirmation to JPC that all services have been disconnected prior to the commencement of works on site.

20. Do's & Don'ts

20.1 Site Supervisors / Do's

20.1.1 Ensure the waste management plan is implemented and all hazardous waste information is passed on to all operatives
20.1.2 Ensure Operatives are trained and that current certificates and cards are available at all times and are in date
20.1.3 Ensure you carry out a site induction for all personnel and that they sign and understand the methods of work and are made aware of all the risks involved
20.1.4 As asbestos is on this site, make sure all staff are made aware of the risk, locations and identify all hazards
20.1.5 Ensure the works are fenced off, correctly secure before commencing works
20.1.6 Ensure all site documentation is in place prior to commencing works
20.1.7 Ensure the welfare facilities are correct and clean at all times
20.1.8 Plan transport movements in line with the traffic management plan from the main contractor
20.1.9 Delegate a trained banks man to control traffic
20.1.10 Check the buried services drawing is displayed and all operatives are aware of it, all excavations will require a permit to dig from the main contractor
20.1.11 Monitor risks and methods at all times and alter if necessary
20.1.12 Monitor the programme and adjust as required to meet the desired completion date

20.2 Site supervisors / Don'ts

20.2.1 Start work until you and all the operatives have read and understood the methods statements and risk assessments, and until they are signed by all workers carrying out the task
20.2.2 Expect operatives to carry out work that they are not trained for
20.2.3 Allow demolition works to be carried out beyond the machine reach
20.2.4 Designate workers to work alone in hazardous areas

CONTRACT: *Client Name – Street, Town, Postcode*

20.3 Operatives and plant operators / Do's

- 20.3.1 Familiarise yourself with the proposed demolition works area with you supervisor
- 20.3.2 Work in strict accordance with the agreed method statement
- 20.3.3 Make sure exclusion areas are in place around agreed zones
- 20.3.4 Discuss works with the banks man so that he is aware of your intentions
- 20.3.5 Check all plant prior to your shift
- 20.3.6 Check for possible hazards and overhead lines
- 20.3.7 Make sure you can reach the works safety
- 20.3.8 Work progressively from the top down
- 20.3.9 Tell your supervisor if you see others taking risks
- 20.3.10 Comply with the site rules at all times
- 20.3.11 Wear your PPE at all times
- 20.3.12 Use a key fob if using plant

20.4 Operatives and plant operators / Don'ts

- 20.4.1 Start work until you have read and understood the methods and risk and until you have signed the document
- 20.4.2 Allow rubbish to accumulate
- 20.4.3 Travel around in the works areas without sufficient supervision
- 20.4.4 Travel on uneven ground with the boom raised
- 20.4.5 Use equipment you have not be trained for
- 20.4.6 Operate equipment without the correct PPE/RPE
- 20.4.7 Take risks even if this means the task does not get finished in the desired time
- 20.4.8 Start work until you have been instructed to
- 20.4.9 Attempt work you are not familiar or have been trained to do
- 20.4.10 Drink alcohol or take drugs before or during your work
- 20.4.11 Smoke anywhere on site with exception to the designated area

CONTRACT: *Client Name – Street, Town, Postcode*

21. Plant Certification:
    - 21.1 *JCB JS220*
    - 21.2 *JCB Telehandler*

JOHN PECK CONSTRUCTION LIMITED

JPC Demolition LLP

JPC DEMOLITION

REPORT OF A THOROUGH EXAMINATION

Lifting operations and lifting equipment regulations S1 1998 No.2307

	Report / Job No:
Address of which examination was conducted	WORPSWORTH 694
Identity of the equipment	JCB
Type	JS 220 LC
Serial Number	JCBJS220C7161044
Date of manufacture	2007
Date of last thorough examination	
Safe working load of the lifting equipment	
Thorough examination type (delete as applicable)	~~6 Months~~ 12 Months In accordance with the examination scheme After the occurrence of exceptional circumstances
The lifting equipment is safe to operate (delete as applicable)	YES ~~NO~~
The following parts have defects that are, or could become a danger to persons (strikethrough if not applicable)	
The following repairs, renewals or alterations are required to remedy the defects (strikethrough if not applicable)	
The following defects are not yet, but could become a danger to person by / within _____ and require the following remedial action (strikethrough if not applicable	
The next thorough examination must be carried out by	18-11-14
The thorough examination included the following tests (strikethrough if examination only)	
Date of the thorough examination	JPC DEMOLITION
Name and address of person making the report, employment type (if employed the name and address of the employer)	Unit 2/3 · Pritchetts Way · Rookley Isle of Wight · PO36 3LT SERVICE DEPARTMENT
Name and address of person signing or authenticating the report on behalf of the author	DATE: 18-11-13 MILEAGE: 6350
Date of report	18-11-13

Registered address: 'Friedman's' Summit House, Wanstead, London E11 2AA.

JPC Registered Number: 413726

JPCD Registered Number: OC336035

MAX OPERATING WEIGHT: 49,714 lb (22,550 kg) NET ENGINE POWER: 172 hp (128 kW)

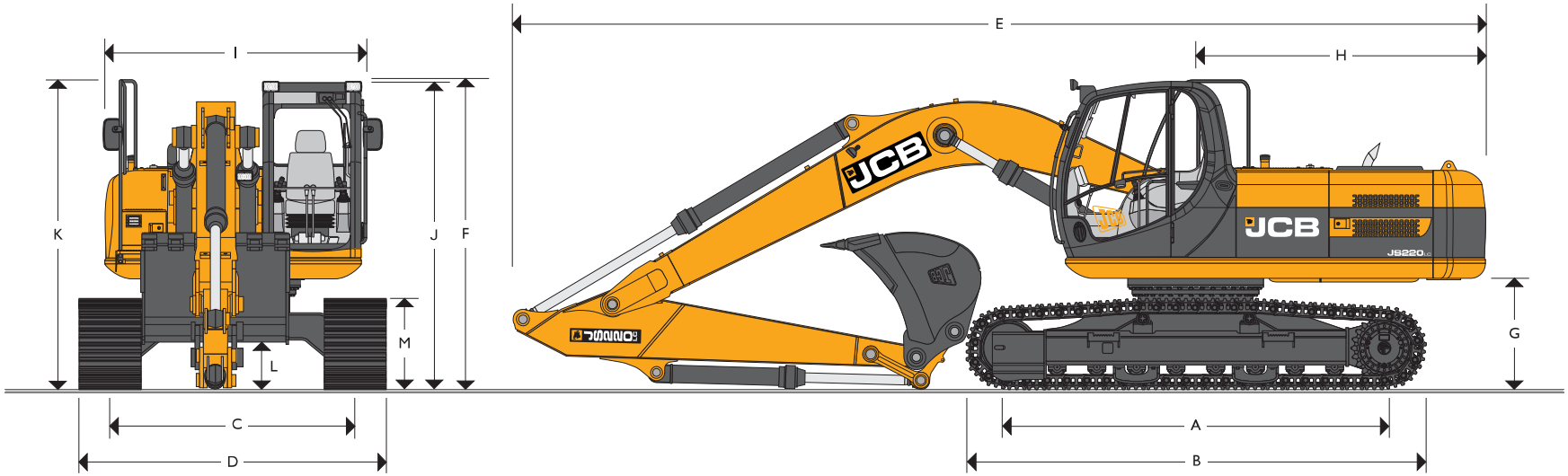

STATIC DIMENSIONS

Dimensions in ft-in (mm)	
A Track Length on Ground	12-0 (3660)
B Undercarriage Overall Length	14-8 (4460)
C Track Gauge	7-10 (2390)
D Width Over Tracks (20 in (500 mm) trackshoes)	–
D Width Over Tracks (24 in (600 mm) trackshoes)	9-10 (2990)
D Width Over Tracks (28 in (700 mm) trackshoes)	10-2 (3090)
D Width Over Tracks (32 in (800 mm) trackshoes)	10-6 (3190)
D Width Over Tracks (36 in (900 mm) trackshoes)	10-10 (3290)

Dipper Lengths	6 ft 4 in (1.91 m)	7 ft 11 in (2.40 m)	9 ft 10 in (3.0 m)
E Transport Length with Monoboom	31-5 (9570)	31-4 (9560)	31-0 (9440)
F Transport Height with Monoboom	10-0 (3055)	10-0 (3060)	9-11 (3025)
Dimensions in ft-in (mm)			
G Counterweight Clearance		3-6 (1066)	
H Tailswing Radius		9-3 (2825)	
I Width of Superstructure		8-4 (2549)	
J Height Over Cab		9-8 (2946)	
K Height Over Grab Rail		9-11 (3025)	
L Ground Clearance		1-7 (486)	
M Track Height		2-11 (885)	

ENGINE

Model:	Isuzu 4HK1X. EPA Tier III emissions compliant.
Type:	Water cooled, 4-stroke, 4-cylinder in-line, direct injection, turbocharged diesel.
Net Power (ISO 3046-1NF):	172 hp (128 kW) at 2,000 rpm.
Piston Displacement:	317 cu in (5.193 l).
Injection:	Electronic governor.
Air Filtration:	Dry element with secondary safety element and in cab warning indicator.
Cooling:	Water cooler via large capacity radiator.
Starting System:	24 V – 6 hp (4.5 kW).
Batteries:	2 x 12 V Heavy-duty.
Alternator:	24 V 40 amp.
Refuelling Pump:	Electric type.

SWING SYSTEM

Swing Motor:	Axial piston.
Swing Brake:	Hydraulic braking plus automatic spring applied disc type parking brake.
Final Drive:	Planetary reduction.
Swing Speed:	12.9 rpm.
Swing Gear:	Large diameter, internally toothed fully sealed grease bath lubricated.
Swing Lock:	Switchable brake in cab.
Swing Torque:	47,941 lbf/ft (65 kNm)

UNDERCARRIAGE

Construction:	Fully welded, "X" frame type with central bellyguarding and track motor guards. Sloping sidemembers with dirt relief holes under top rollers.
Recovery Point:	Front and rear.
Track Type:	Sealed and greased.
Track Shoe Options:	LC – 24 in (600 mm), 28 in (700 mm), 32 in (800 mm), 36 in (900 mm).
Upper and Lower Rollers:	Heat treated, sealed and lubricated.
Track Adjustment:	Grease cylinder type.
Track Idler:	Sealed and lubricated, with spring cushioned recoil.
	LC
No of Track Guides:	2 per side
No of Lower Rollers:	8 per side
No of Upper Rollers:	2 per side
No of Track Shoes:	49 per side

HYDRAULICS

A variable flow load sensing system with flow on demand, variable power output and servo operated, multi-function open center control. Machine auto warm up standard – maximizes performance in cold conditions.

Pumps:

Main Pumps	2 variable displacement axial piston type.
Maximum Flow	2 x 57 gpm (2 x 214 l/min).
Servo Pump	Gear type.
Maximum Flow	5.3 gpm (20 l/min).

Control Valve:

A combined four and five spool control valve with auxiliary service spool as standard. When required twin pump flow is combined to boom, dipper and bucket services for greater speed and efficiency.

Relief Valve Settings:

Boom / Arm / Bucket:	4,975 lbf/sq in (343 bar)
Automatic Power Boost:	5,410 lbf/sq in (373 bar)
Swing Circuit:	4,190 lbf/sq in (289 bar)
Travel Circuit:	4,975 lbf/sq in (343 bar)
Pilot Control:	580 lbf/sq in (40 bar)

A separate Cushion Control valve in the servo system provides cushioning of the boom and dipper spools selection and quick warm-up of the servo system.

Hydraulic Cylinders:

Double acting type, with bolt-up end caps and hardened steel bearing bushes. End cushioning is fitted as standard on boom, dipper and bucket cylinders.

Optional hose burst check valves available for boom and dipper cylinders.

Filtration:

The hydraulic components are protected by the highest standard of filtration to ensure long hydraulic fluid and component life.

In Tank:	150 micron, suction strainer.
Main Return Line:	10 micron, fibreform element.
Plexus Bypass Line:	1.5 micron, paper element.
Pilot Line:	10 micron, paper element.
Hydraulic Hammer Return:	10 micron, reinforced microform element.

Cooling:

Cooling is provided via a full return line air blast cooler as part of a single face cooling pack in conjunction with the engine water cooler.

TRACK DRIVE

Type:	Fully hydrostatic, three speed with autoshift between high and medium speed.
Travel Motors:	Variable displacement axial piston type, fully guarded within undercarriage frame.
Final Drive:	Planetary reduction, bolt-on sprockets.
Service Brake:	Hydraulic counter balance valve to prevent overspeeding on gradients.
Park Brake:	Disc type, spring applied, automatic hydraulic release.
Gradeability:	70% (35 deg) continuous.
Travel Speed:	High – 3.4 mph (5.6 km/h). Mid – 2.1 mph (3.3 km/h). Low – 1.4 mph (2.3 km/h).
Tractive Effort:	43,144 lbf (191.9 kN).

EXCAVATOR END

Monoboom available along with a choice of dipper lengths to suit the requirements of reach, dig-depth, loadover height, tearouts and site versatility. Reserve strength is built into the fully welded structures for hydraulic hammer and other arduous operations.
Fabricated bucket tipping links are provided with a choice of lift points.
Strong, durable construction, large cross sections and multi plate fabrications to withstand high stress applications.
The 18 ft 8 in (5.7 m) boom is designed to ensure the optimum digging envelope when matched with the three dipper lengths.
Low maintenance bronze alloy bushes with graphite plugs are fitted to boom base and boom to dipper pivots resulting in 1,000 hour greasing intervals at these points.

AMS – ADVANCED MANAGEMENT SYSTEM

Four selectable working modes link the operators control movements with the engine and hydraulic systems to maximize productivity and efficiency.

A (Auto):	Up to 100% engine power and 100% flow. Gives variable power and speed depending on the operator's input, matching the demand for output and efficiency to the job. Power boost is automatically activated in this mode should hard conditions be encountered. Auto idle cuts in after a period of inactivity (between 5 and 30 seconds as set by the operator)
E (Economy):	80% engine power. 95% of hydraulic flow maximizes economy while maintaining excellent output.
P (Precision):	55% engine power. 90% of hydraulic flow for fine control of grading operations.
L (Lifting):	55% engine power. 63% of hydraulic flow with permanent power boost for maximum lifting power and control.

The Auto mode allows the AMS processor to select the optimum operational performance to match the demands of the job while the three alternative modes give precise matching of application when specific tasks are undertaken.
The adjustable position monitor mounted on the front right hand pillar of the cab gives the operator a constant read out of mode, tracking range, operating temperature and a host of other information, while retaining excellent visibility of the monitor and the job being carried out.
The required flow for hammer applications can be set and stored in the AMS memory and is automatically activated whenever the hammer pedal is depressed.
A maintenance indicator warns of imminent service needs, and all servicing and basic checks can be carried out using only the in cab display.

CAB

Excellent digging, loading and positioning visibility results from the careful design of front, side and roof lights. All windows are tinted to improve in cab conditions.
Fully opening front windshield is very smooth to operate and as the lower windshield is stored within the top windshield frame it makes complete front windshield opening easy, fast and convenient.
Fresh air ventilation available from opening door window, opening slot in front windshield and fully opening front windshield.
Parallelogram wiper for upper windshield ensuring good wiped area for maximum visibility. Wiper motor is fitted in the left hand side of the sun roof so as not to affect bucket visibility when loading. Optional lower windshield wiper available.
Fresh air ventilation and heater with windshield defroster. Infinitely variable blower speed, temperature and recirculation control. Climate control allowing operator to set desired temperature. Fully adjustable deluxe high seat suspension seat with arm rest adjustment and backrest recline. Optional radio with digital tuner fitted into the roof lining for maximum protection. Conveniently placed radio mute button incorporated into lower console. 12v power point and mobile phone holder built into the right hand console. Courtesy light can be operated from ground level and is illuminated for five minutes or until switched off improving operator access at night. Cab mounted roller blind protects operator from suns' glare through front or top windshields.

CONTROLS

Excavator:	All servo lever operated to ISO control pattern, independently adjustable to the seat. Dual pattern control switch, in the fuse box, makes it convenient to switch from ISO to SAE control pattern.
Tracks:	Individually servo operated by foot pedal or hand lever. Speed selection via joystick button.
Auxiliary:	Via servo operated foot pedal.
Control Isolation:	Via gate lock lever at cab entrance or panel switch.
Engine Speed:	Dial type throttle control plus servo lever mounted one-touch idle control or separate selectable auto-idle with adjustable time delay using AMS.
Engine Stop:	Ignition key operated and separate shut-down button.
Horn:	Operated via servo lever mounted button.

SERVICE CAPACITIES

Fuel Tank	gal (l)	91 (343)
Engine Coolant	gal (l)	6.7 (25.5)
Engine Oil	gal (l)	5.7 (21.5)
Swing Reduction Gear	gal (l)	1.3 (5.0)
Track Reduction Gear (each side)	gal (l)	1.2 (4.7)
Hydraulic System	gal (l)	53 (200)
Hydraulic Tank	gal (l)	32 (120)

GENERAL PURPOSE EXCAVATOR BUCKETS

All buckets are fully welded steel, with sealed, hardened steel pivot pins and replaceable wear parts.

Max Width	Capacity (SAE Heaped)	Weight
24 in (600 mm)	0.52 cu yd (0.40 cu m)	1067 lb (484 kg)
36 in (900 mm)	0.93 cu yd (0.71 cu m)	1312 lb (595 kg)
39 in (1000 mm)	1.06 cu yd (0.81 cu m)	1382 lb (627 kg)
47 in (1200 mm)	1.35 cu yd (1.03 cu m)	1555 lb (705 kg)
53 in (1350 mm)	1.37 cu yd (1.05 cu m)	1497 lb (679 kg)
57 in (1450 mm)	1.49 cu yd (1.14 cu m)	1588 lb (720 kg)
59 in (1500 mm)	1.56 cu yd (1.19 cu m)	1618 lb (734 kg)

WEIGHTS AND GROUND BEARING PRESSURES

Figures include 1.5 cu yd (1.14 cu m) bucket 1675 lb (760 kg), operator, full fuel tank, 24 in (600 mm) track shoes and 7 ft 11in (2.4 m) dipper.

JS220 LC

	Machine Weight		Ground Bearing Pressure	
	lb	kg	lb/sq ft	kg/cm
24 in (600 mm) shoes	48,290	21,904	5.83	0.41
28 in (700 mm) shoes	48,880	22,172	5.12	0.36
31 in (800 mm) shoes	49,470	22,440	4.41	0.31
35 in (900 mm) shoes	49,580	22,490	3.98	0.28

For 28 in shoes add 295 lb (135 kg)
For 32 in shoes add 595 lb (270 kg)
For 36 in shoes add 645 lb (295 kg)

STANDARD / OPTIONAL EQUIPMENT

Standard Equipment: Engine fan guard; Cold start pre-heat; Auto engine warm up; Double element air cleaner; Electric refuelling pump; Heavy duty alternator; Electrics isolator; Heavy duty batteries; Cab & engine soundproofing; Cab heater & window defroster; Tinted glass; Interior light; Coat hook; Cigarette lighter; Ashtray; Operator's storage box; Removable floormat; Windshield washer/wiper; Plug-in power socket; Automatic power boost; Auto-idle; One-touch engine speed control; Hydraulic cushion control; Boom/swing priority switch; Plexus hydraulic oil filtration; HSP pressure test points; Auxiliary pipework mounting brackets; Work lights – boom & mainframe mounted; Undercarriage belly guarding; Upper structure under covers; Swing system cover; Twin track guides; External mirrors; Handrail & non slip walk ways; Quick connect engine oil drain pipe; Front windshield blind; Quick connect fuel tank drain pipe; Hinged engine under cover; Lap seat belt; ISO/SAE control pattern change over; Air conditioning.

Optional Equipment: Hose burst check valves & overload warning system; Tipping link mounted lift points; General purpose buckets; Ditch/grading buckets; Quickhitch buckets; Hydraulic hammers; Auxiliary pipework (full and low flow); Cab mounted & rear work lights; Rotating beacon; Rain guard; Biodegradeable oil; Air suspension seat with heated pad and lumbar support adjustment; Lower windshield wiper; Radio; High and low temperature hydraulic oil option.

WORKING RANGE

Boom Length 18 ft 8 in (5.70 m)					
Dipper Length			6 ft 2 in (1.91 m)	7 ft 10 in (2.40 m)	9 ft 10 in (3.00 m)
A	Maximum Digging Reach	ft-in (m)	29-2 (8.89)	30-8 (9.34)	32-5 (9.87)
B	Maximum Digging Reach (on ground)	ft-in (m)	28-7 (8.70)	30-1 (9.16)	31-10 (9.70)
C	Maximum Digging Depth	ft-in (m)	18-2 (5.53)	19-9 (6.02)	21-8 (6.60)
D	Maximum Digging Height	ft-in (m)	29-4 (8.95)	30-2 (9.20)	30-10 (9.40)
E	Maximum Dumping Height	ft-in (m)	20-8 (6.31)	21-5 (6.53)	22-2 (6.75)
F	Maximum Vertical Wall Cut Depth	ft-in (m)	16-1 (4.90)	17-11 (5.47)	19-11 (6.07)
G	Minimum Swing Radius	ft-in (m)	12-4 (3.76)	12-2 (3.71)	11-10 (3.60)
	Bucket Rotation	degrees	183°	183°	183°
	Dipper Tearout (ISO 6015)	lbf (kgf)	29,650 (13,450)	25,485 (11,560)	21,142 (9590)
	Dipper Tearout with Boost (ISO 6015)	lbf (kgf)	32,210 (14,610)	27,670 (12,550)	22,950 (10,410)
	Bucket Tearout (ISO 6015)	lbf (kgf)	32,080 (14,550)	32,080 (14,550)	32,080 (14,550)
	Bucket Tearout with Boost (ISO 6015)	lbf (kgf)	34,835 (15,800)	34,835 (15,800)	34,835 (15,800)

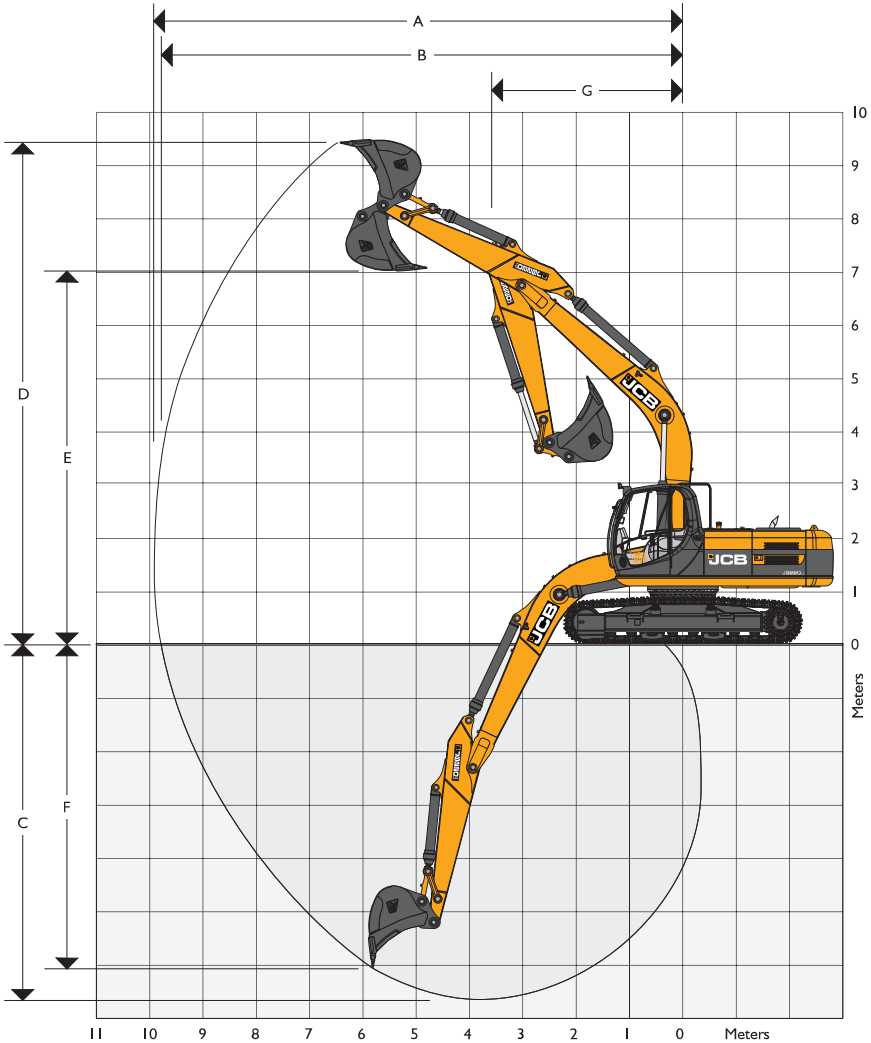

LIFT CAPACITIES – Dipper length: 6 ft 2 in (1.9 m), Monoboom 18 ft 8 in (5.7 m), Trackshoes: 32 in (800 mm), No Bucket. JS220 LC

Reach	9 ft 10 in (3 m)		14 ft 9 in (4.5 m)		19 ft 8 in (6 m)		24 ft 7 in (7.5 m)		Max Reach		Max Reach
Load Point Height	lb (kg)	lb (kg)	lb (kg)	lb (kg)	lb (kg)	lb (kg)	lb (kg)	lb (kg)	lb (kg)	lb (kg)	ft-in (mm)
19.8 ft (6.0 m)					14,065 (6380)*	12,787 (5800)			12,610 (5720)*	12,434 (5640)	20-0 (6105)
14.9 ft (4.5 m)			17,681 (8020)*	17,681 (8020)*	14,815 (6720)*	12,566 (5700)			12,566 (5700)*	10,163 (4610)	22-7 (6907)
9.10 ft (3.0 m)			21,760 (9870)*	18,078 (8200)	16,469 (7470)*	12,125 (5500)			13,184 (5980)*	9171 (4160)	24-0 (7318)
4.11 ft (1.5 m)			24,714 (11,210)*	17,284 (7840)	17,990 (8160)	11,729 (5320)			13,250 (6010)	8841 (4010)	24-2 (7406)
0 m			25,375 (11,510)*	17,042 (7730)	17,747 (8050)	11,508 (5220)			13,735 (6230)	9127 (4140)	23-6 (7182)
– 4.11 ft (– 1.5 m)	28,682 (13,010)*	28,682 (13,010)*	24,339 (11,040)*	17,086 (7750)	17,725 (8040)	11,508 (5220)			15,454 (7010)	10,163 (4610)	21-7 (6614)
– 9.10 ft (– 3.0 m)	28,131 (12,760)*	28,131 (12,760)*	21,275 (9650)*	17,416 (7900)					16,755 (7600)*	12,897 (5850)	18-4 (5596)

LIFT CAPACITIES – Dipper length: 7 ft 10 in (2.4 m), Monoboom 18 ft 8 in (5.7 m), Trackshoes: 32 in (800 mm), No Bucket. JS220 LC

Reach	9 ft 10 in (3 m)		14 ft 9 in (4.5 m)		19 ft 8 in (6 m)		24 ft 7 in (7.5 m)		Max Reach		Max Reach
Load Point Height	lb (kg)	lb (kg)	lb (kg)	lb (kg)	lb (kg)	lb (kg)	lb (kg)	lb (kg)	lb (kg)	lb (kg)	ft-in (mm)
24.7 ft (7.5 m)									11,530 (5230)*	11,530 (5230)*	18-1 (5547)
19.8 ft (6.0 m)					12,809 (5810)*	12,809 (5810)*			10,560 (4790)*	10,560 (4790)*	22-2 (6767)
14.9 ft (4.5 m)			16,160 (7330)*	16,160 (7330)*	13,867 (6290)*	12,677 (5750)			10,340 (4690)*	9061 (4110)	24-6 (7497)
9.10 ft (3.0 m)			20,349 (9230)*	18,364 (8330)	15,675 (7110)*	12,214 (5540)	13,250 (6010)	8907 (4040)	10,582 (4800)*	8267 (3750)	25-10 (7878)
4.11 ft (1.5 m)			23,854 (10,820)*	17,483 (7930)	17,483 (7930)*	11,773 (5340)	13,029 (5910)	8708 (3950)	11,288 (5120)*	8025 (3640)	26-1 (7959)
0 m			25,309 (11,480)*	17,064 (7740)	17,725 (8040)	11,508 (5220)	12,875 (5840)	8576 (3890)	12,302 (5580)	8223 (3730)	25-5 (7751)
– 4.11 ft (– 1.5 m)	23,920 (10,850)*	23,920 (10,850)*	24,912 (11,300)*	17,020 (7720)	17,637 (8000)	11,420 (5180)			13,558 (6150)	8995 (4080)	23-8 (7229)
– 9.10 ft (– 3.0 m)	31,063 (14,090)*	31,063 (14,090)*	22,641 (10,270)*	17,218 (7810)	16,667 (7560)*	11,574 (5250)			15,388 (6980)*	10,869 (4930)	20-8 (6313)
– 14.9 ft (– 4.5 m)			16,535 (7500)*	16,535 (7500)*					15,102 (6850)*	15,102 (6850)*	15-7 (4777)

Lift Capacity Front and Rear

Lift Capacity Full Circle

Notes:

1. For lifting capacity including bucket, subtract total weight of bucket or bucket and quickhitch from above values.
2. Lifting capacities are based on ISO 10567, that is: 75% of minimum tipping load or 87% of hydraulic lift capacity, whichever is the less. Lifting capacities marked* are based on hydraulic capacity.
3. Lift capacities assume that the machine is on firm, level ground.
4. Lift capacities may be limited by local regulations. Please refer to your dealer.

LIFT CAPACITIES – Dipper length: 9 ft 10 in (3.0 m), Monoboom 18 ft 8 in (5.7 m), Trackshoes: 32 in (800 mm), No Bucket. **JS220 LC**

Reach	9 ft 10 in (3 m)		14 ft 9 in (4.5 m)		19 ft 8 in (6 m)		24 ft 7 in (7.5 m)		Max Reach		Max Reach
Load Point Height	lb (kg)	lb (kg)	lb (kg)	lb (kg)	lb (kg)	lb (kg)	lb (kg)	lb (kg)	lb (kg)	lb (kg)	ft -in (mm)
24.7 ft (7.5 m)					9590 (4350)*	9590 (4350)*			7584 (3440)*	7584 (3440)*	20-7 (6285)
19.8 ft (6.0 m)					11,398 (5170)*	11,398 (5170)*			7077 (3210)*	7077 (3210)*	24-2 (7382)
14.9 ft (4.5 m)					12,655 (5740)*	12,655 (5740)*	11,442 (5190)*	9171 (4160)	6967 (3160)*	6967 (3160)*	26-5 (8056)
9.10 ft (3.0 m)	25,530 (11,580)*	25,530 (11,580)*	18,475 (8380)*	18,475 (8380)*	14,617 (6630)*	12,346 (5600)	12,809 (5810)*	8951 (4060)	7121 (3230)*	7121 (3230)*	27-6 (8411)
4.11 ft (1.5 m)			22,487 (10,200)*	17,659 (8010)	16,667 (7560)*	11,839 (5370)	13,051 (5920)	8708 (3950)	7562 (3430)*	7819 (3320)	27-10 (8488)
0 m	14,110 (6400)*	14,110 (6400)*	24,780 (11,240)*	17,064 (7740)	17,725 (8040)	11,486 (5210)	12,831 (5820)	8510 (3860)	8378 (3800)*	7452 (3380)	27-2 (8293)
– 4.11 ft (– 1.5 m)	23,171 (10,510)*	23,171 (10,510)*	25,155 (11,410)*	16,887 (7660)	17,549 (7960)	11,310 (5130)	12,765 (5790)	8444 (3830)	9855 (4470)*	8047 (3650)	25-7 (7807)
– 9.10 ft (– 3.0 m)	33,775 (15,320)*	32,805 (14,880)	23,744 (10,770)*	16,976 (7700)	17,593 (7980)	11,376 (5160)			12,765 (5790)*	9392 (4260)	22-10 (6969)
– 14.9 ft (– 4.5 m)	27,470 (12,460)*	27,470 (12,460)*	19,665 (8920)*	17,394 (7890)					14,903 (6760)*	12,809 (5810)	18-5 (5619)

Lift Capacity Front and Rear

Lift Capacity Full Circle

Notes:

1. For lifting capacity including bucket, subtract total weight of bucket or bucket and quickhitch from above values.
2. Lifting capacities are based on ISO 10567, that is: 75% of minimum tipping load or 87% of hydraulic lift capacity, whichever is the less. Lifting capacities marked* are based on hydraulic capacity.
3. Lift capacities assume that the machine is on firm, level ground.
4. Lift capacities may be limited by local regulations. Please refer to your dealer.

A GLOBAL COMMITMENT TO QUALITY

JCB's total commitment to its products and customers has helped it grow from a one-man business into one of the world's largest manufacturers of backhoe loaders, crawler excavators, wheeled excavators, telescopic handlers, wheeled loaders, dump trucks, rough terrain fork lifts, industrial fork lifts, mini/midi excavators, skid steer loaders and tractors.

By making constant and massive investments in the latest production technology, the JCB factories have become some of the most advanced in the world.

By leading the field in innovative research and design, extensive testing and stringent quality control, JCB machines have become renowned all over the world for performance, value and reliability.

And with an extensive dealer sales and service network in over 150 countries, we aim to deliver the best customer support in the industry.

Through setting the standards by which others are judged, JCB has become one of the world's most impressive success stories.

JCB Headquarters Savannah, 2000 Bamford Blvd, Savannah, GA 31322 Tel: (912) 447-2000 Fax: (912) 447-2299 www.jcb.com

DWUSA 2979 12/11

JOHN PECK CONSTRUCTION LIMITED

JPC Demolition LLP

JPC DEMOLITION

REPORT OF A THOROUGH EXAMINATION

Lifting operations and lifting equipment regulations S1 1998 No.2307

	Report / Job No:
Address of which examination was conducted	4240
Identity of the equipment	JCB
Type	540-170 FORKLIFT
Serial Number	JCBSAFSGT1519871
Date of manufacture	2010
Date of last thorough examination	
Safe working load of the lifting equipment	
Thorough examination type (delete as applicable)	~~6 Months~~ 12 Months In accordance with the examination scheme After the occurrence of exceptional circumstances
The lifting equipment is safe to operate (delete as applicable)	YES ~~NO~~
The following parts have defects that are, or could become a danger to persons (strikethrough if not applicable)	
The following repairs, renewals or alterations are required to remedy the defects (strikethrough if not applicable)	
The following defects are not yet, but could become a danger to person by / within _____ and require the following remedial action (strikethrough if not applicable	
The next thorough examination must be carried out by	18-11-14
The thorough examination included the following tests (strikethrough if examination only)	JPC DEMOLITION
Date of the thorough examination	Unit 2/3 · Pritchetts Way · Rookley
Name and address of person making the report, employment type (if employed the name and address of the employer)	Isle of Wight · PO38 3LT SERVICE DEPARTMENT DATE: 18-11-13 MILEAGE: 3146
Name and address of person signing or authenticating the report on behalf of the author	
Date of report	18-11-13

Registered address: 'Friedman's' Summit House, Wanstead, London E11 2AA.

JPC Registered Number: 413726

JPCD Registered Number: OC336035

JCB LOADALL | 540-170

MAX. PAYLOAD: 4.0 tonnes (8820lb)

MAX. LIFT HEIGHT: 16.7 metres (54ft 9in)

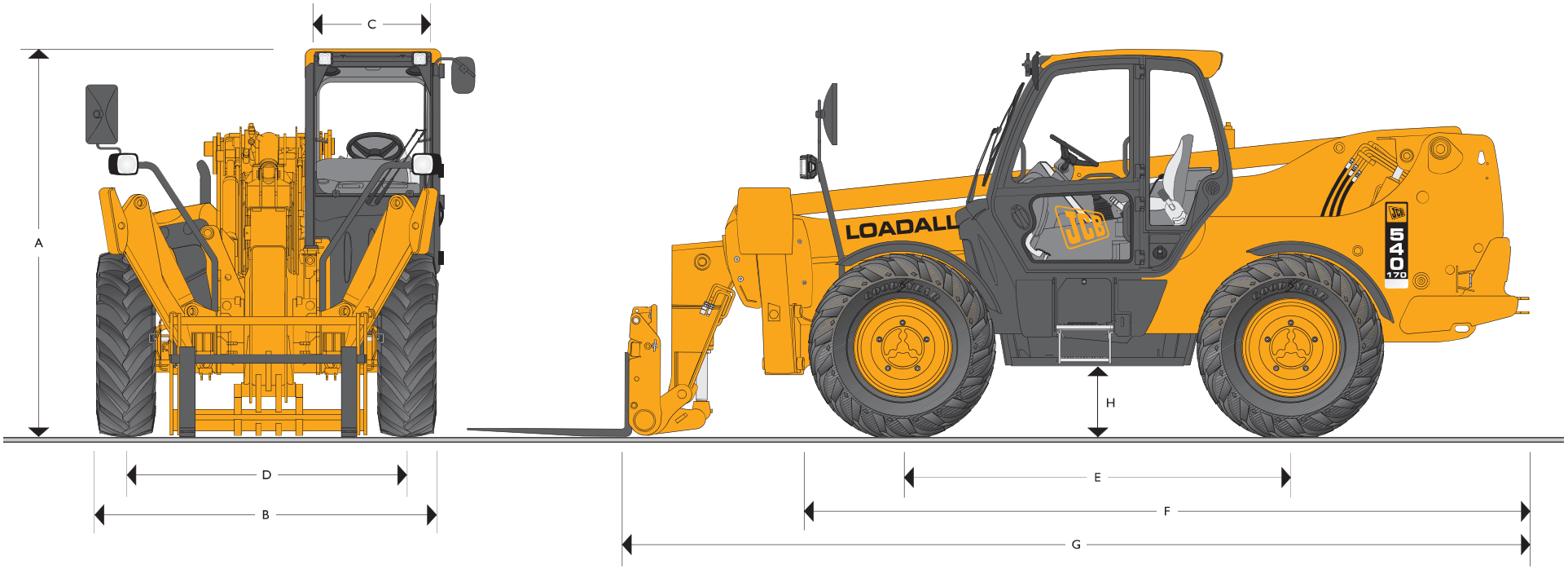

STATIC DIMENSIONS

Machine model		540-170
		m (ft-in)
A	Overall height	2.69 (8-10)
B	Overall width (over tyres)*	2.44 (8-0)
C	Inside width of cab	0.94 (3-1)
D	Front track	1.90 (6-3)
E	Wheelbase	2.75 (9-0)
F	Overall length to front tyres	5.08 (16-8)

*Dependant upon tyre specified.

Machine model		540-170
		m (ft-in)
G	Overall length to front carriage	6.36 (20-10)
H	Ground clearance	0.40 (1-4)
	Outside turn radius (over tyres)	4.1 (13-5)
	Weight kg (lb)	12160 (26810)
	Tyres	15.5/80-24

High Performance by Design

LIFT PERFORMANCE – STABILISERS EXTENDED

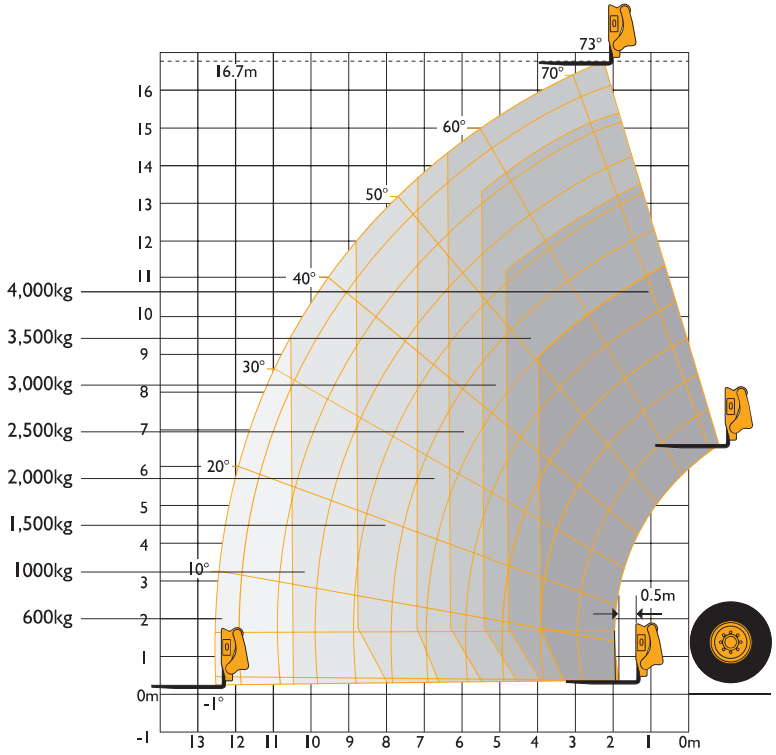

LIFT PERFORMANCE – STABILISERS RETRACTED

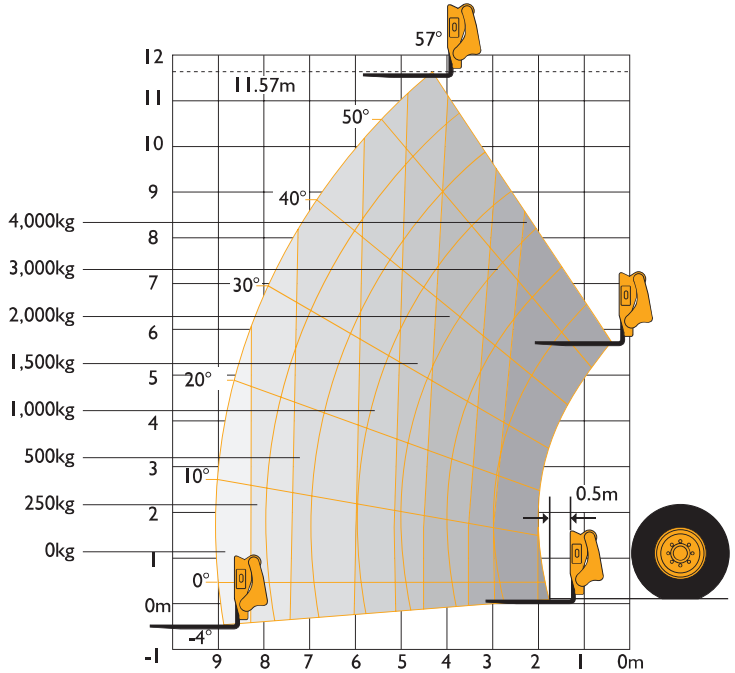

Chassis Levelling (Sway)
With stabilisers retracted (Sway angle ±9°)

LIFT PERFORMANCE – STABILISERS EXTENDED

With stabilisers extended		
Maximum lift capacity	kg (lb)	4000 (8820)
Lift capacity to full height	kg (lb)	2500 (5510)
Lift capacity at full reach	kg (lb)	600 (1320)
Lift height	m (ft-in)	16.7 (54-9)
Reach at maximum lift height	m (ft-in)	2.05 (6-9)
Maximum forward reach	m (ft-in)	12.50 (41-0)
Reach with 1 tonne load	m (ft-in)	10.50 (34-5)
Placing Height	m (ft-in)	16.20 (53-2)

Complies with stability test EN 1459 Annex B.

LIFT PERFORMANCE – STABILISERS RETRACTED

With Stabilisers Retracted		
Maximum lift capacity	kg (lb)	4000 (8820)
Lift capacity to maximum lift height	kg (lb)	1500 (3310)
Lift capacity at full reach	kg (lb)	0 (0)
Maximum lift height	m (ft-in)	11.57 (37-11)
Reach at maximum lift height	m (ft-in)	4.15 (13-7)
Maximum forward reach	m (ft-in)	9.04 (29-8)
Reach with 1 tonne load	m (ft-in)	6.00 (19-8)
Placing Height	m (ft-in)	10.90 (35-9)

Complies with stability test EN 1459 Annex B.

JCB LOADALL | 540-170

ENGINE

Latest technology and advanced design provides low fuel consumption, reduced noise, high torque and power output, total reliability and minimal maintenance.
Two-stage, dry type air filter with primary and safety elements.

Machine Model		540-170
Displacement	ltr (in³)	4.4 (269)
No. of cylinders		4
Bore size	mm (in)	105 (4.13)
Stroke	mm (in)	127 (5)
Aspiration		Turbo
Power rating		
Power @ 2200rpm	kW (HP)	74.5 (100)
Torque rating		
Torque @ 1400rpm	Nm (lbf ft)	415 (306)

TRANSMISSION

JCB powershift transmission incorporating torque converter, bevel box and a 4 speed powershift gearbox in one resiliently mounted unit.
A combined steering column mounted switch incorporating directional control and 4 forward and 4 reverse powershift gears.
Travel speed 25kph (18mph).
Front and rear drive axles: JCB epicyclic hub reduction drive/steer axles with Max-Trac torque proportioning differentials.
Permanent 4 wheel drive.

BRAKES

Service brakes: Servo-assisted-hydraulically activated, self-adjusting, oil-immersed multi-disc type on front and rear axle.
Parking brake: Hand operated disc brake on output of gearbox.

BOOM AND CARRIAGE

Boom is manufactured from high tensile steel.
Low maintenance, hard wearing pads.
JCB Q-fit self-levelling carriage with lever operated pin locking accepts pallet forks and a wide range of attachments.
One boom end auxiliary hydraulic service fitted as standard.

SAFETY CHECK VALVES

Fitted to carriage tilt, telescopic and boom lift rams.

SERVICE CAPACITIES

Fuel tank	litres (UK gal)	125 (27.5)
Hydraulic tank	litres (UK gal)	150 (33.0)
Coolant	litres (UK gal)	23 (5.1)

HYDRAULICS

Twin gear pump, with suction strainer and filter allows simultaneous operation of raise/lower and extend/retract.

Operating system pressure	bar (psi)	260 (3770)
Flow at system pressure @ 2200rpm	ltr/min	90+72
Hydraulic Cycle Times		**Seconds**
Stabiliser lower		6.6
Stabiliser lift		4.9
Boom raise and extend		41.8
Boom lower and retract		33
Bucket dump		4.7
Bucket crowd		5.1

ELECTRICS

12 v negative earth. 125 AH battery. 85 amp alternator. Full road lighting. Reversing light. Direction indicators. Hazard warning. Reverse alarm.

CAB

Quiet safe and comfortable cab conforms to ROPS ISO 3471 and FOPS ISO 3449. Tinted glass all round with laminated roof screen. Roof bars, front, rear and roof screen wash/wipe and heater/screen demister. Opening rear window. Audio-visual warning system for coolant temperature, engine oil pressure, air cleaner, battery charge, transmission oil temperature and pressure. Hourmeter, road speed indicator. Engine temperature and fuel gauge. Servo joystick hydraulic control levers. Adjustable column incorporates stalk powershift change and forward reverse shuttle. Throttle and brake pedal. Adjustable suspension seat with adjacent park brake. Automatic eye level audio-visual load moment indicator warning system receiving a signal from a load sensor on the rear axle. This system continuously monitors the machine's forward stability and leaves the operator in control at all times. Fitted with levelling inclinometer, plus indicator lamps to show when the stabilizers are on firm ground. Safety canopy as above but with side glass and roof glass only (screen wiper and heater/screen demister not applicable).

STEERING

Hydrostatic power steering.
Three steer mode options: front wheel steer; all wheel steer; crab steer: operated from in the cab by a selection switch.

OPTIONS AND ACCESSORIES

Options: Front and rear working lights, rotating flashing beacon, fire extinguisher, industrial tyres, electrical 2/4WD disconnect, windscreen and roof guard, air suspension seat, deluxe cab trim, no smoking pack, roof and front screen blind, radio kit, air conditioning.
Attachments: Contact your local dealer for details of the comprehensive range.

High Performance by Design

A GLOBAL COMMITMENT TO QUALITY

JCB's total commitment to its products and customers has helped it grow from a one-man business into Britain's largest privately owned manufacturer of backhoe loaders, crawler excavators, wheeled excavators, telescopic handlers, wheeled loaders, dump trucks, rough terrain fork lifts, industrial fork lifts, mini/midi excavators, skid steer loaders and tractors.

By making constant and massive investments in the latest production technology, the JCB factories have become some of the most advanced in Europe.

By leading the field in innovative research and design, extensive testing and stringent quality control, JCB machines have become renowned all over the world for performance, value and reliability.

And with a global sales and service network of over 400 distributors and agents, the company exports over 70% of its production to all five continents.

Through setting the standards by which others are judged, JCB has become one of Britain's most impressive success stories.

JCB Sales Limited, Rocester, Staffordshire ST14 5JP. Tel: 01889 590312. Fax: 01889 590588. Web: http://www.jcb.co.uk

9999/4978 01/04 Issue 2

High Performance by Design

CONTRACT: *Client Name – Street, Town, Postcode*

22. Site supervisor, plant operatives and site operative certification

16.1	John Peck	Director
16.2	Nick Fairweather	Surveyor
16.3	*Joe Bloggs*	Site supervisor
16.4	*Joe Bloggs 1*	Plant Operators
16.5	*Joe Bloggs 2* *Joe Bloggs 3* *Joe Bloggs 4* *Joe Bloggs 5*	Site operatives
16.6	Darren Rimmer	Lorry Driver

CONTRACT: *Client Name – Street, Town, Postcode*

23. Signature page:

I confirm that I have received a site induction by the main contractor, read the above method statement and risk assessments and fully understand and agree to carry out the works in accordance with this safe method of work. Failure to adhere to this method will result in appropriate actions.

Name	Company	Date	Signed
	JPC Demolition		
	JPC Demolition		
	JPC Demolition		
	JPC Demolition		
	JPC Demolition		
	JPC Demolition		
	JPC Demolition		
	JPC Demolition		
	JPC Demolition		
	JPC Demolition		
	JPC Demolition		
	JPC Demolition		
	JPC Demolition		
	JPC Demolition		

Prepared by	Position	Date	Checked by	Position	Date	Approved *Main Contractor*
Joe Bloggs	*Contracts Manager*	*03/12/2013*	*John Peck*	*Director*	*03/12/2013*	

CONTRACT: *Client Name – Street, Town, Postcode*

End of statement:
Appendix 1 – Risk assessments and COSHH assessments